DIMENSIONS

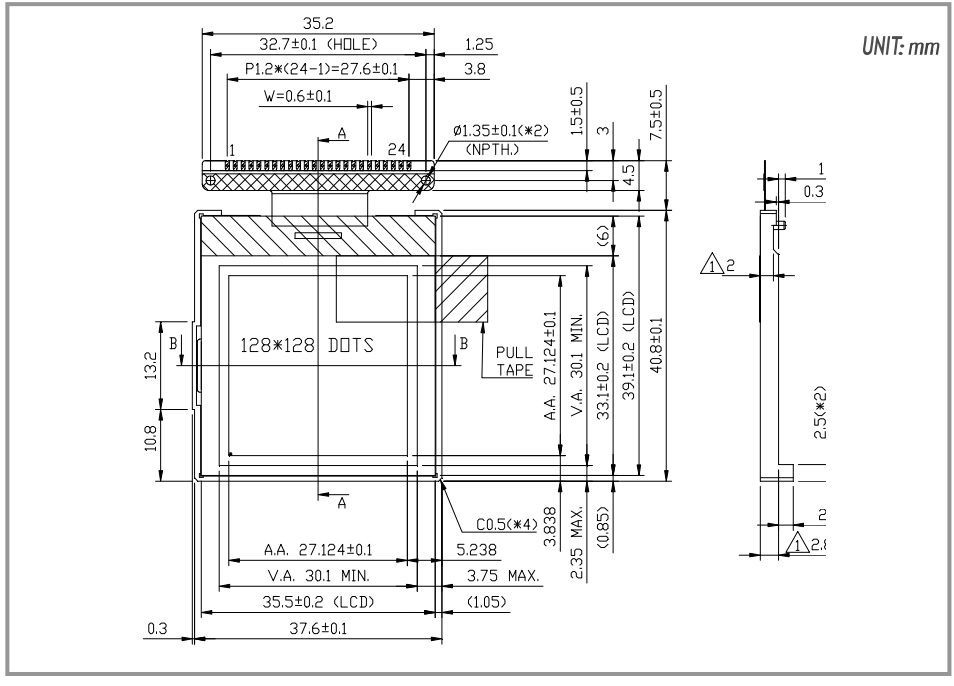

Not to scale

Emerging Display Technologies Corp.
Copyright 2007